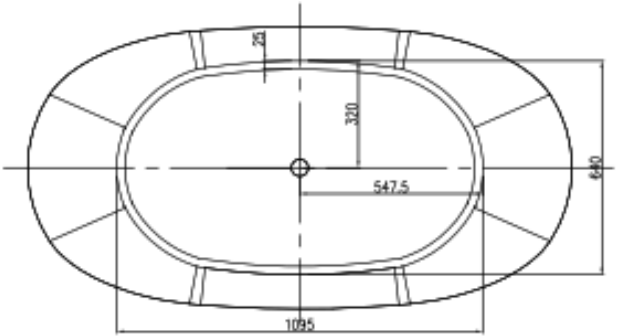

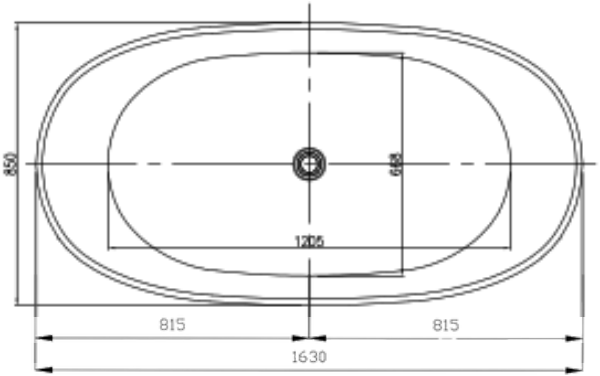

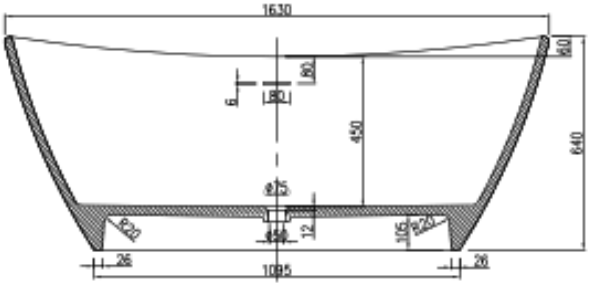

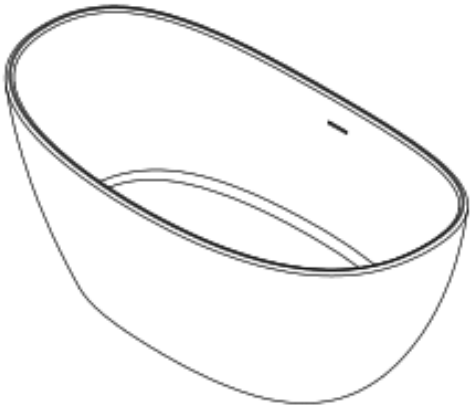

MARIA PBS1009

SIZE: 163 CM | APPROX. WEIGHT: 140 KG | WATER CAPACITY: 340 LITRE

+ Pietra Bianca offers an optional overflow drain and/or a complimenting stone drain cover at an additional cost.

PIETRA BIANCA

CRAFTED WITH PRECISION, ENGINEERED FOR EXCELLENCE