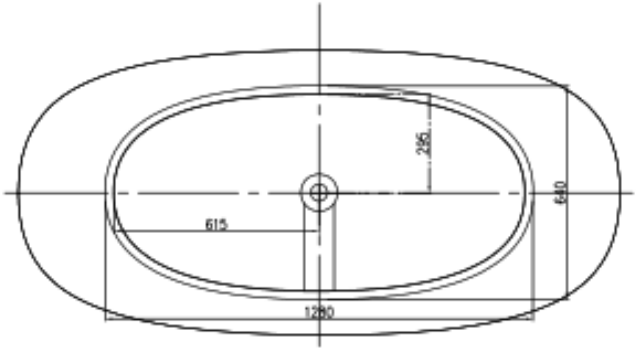

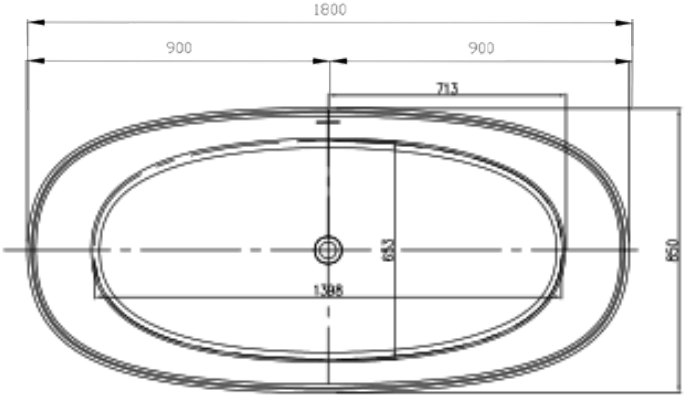

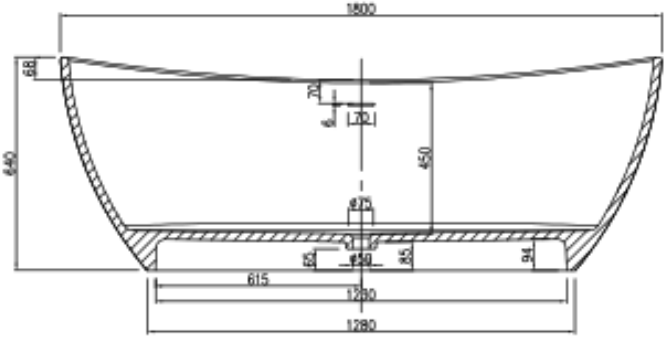

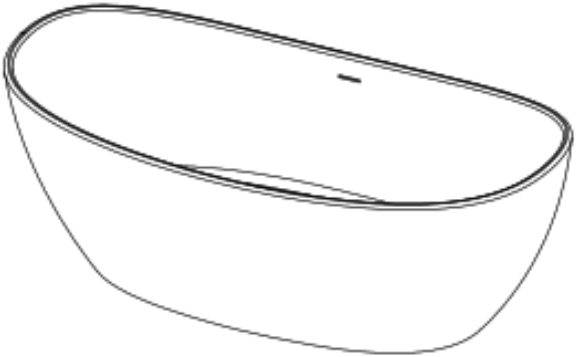

MARIA PBS1069

SIZE: 180 CM | APPROX. WEIGHT: 150 KG | WATER CAPACITY: 400 LITRE

+ Pietra Bianca offers an optional overflow drain and/or a complimenting stone drain cover at an additional cost.

PIETRA BIANCA

CRAFTED WITH PRECISION, ENGINEERED FOR EXCELLENCE